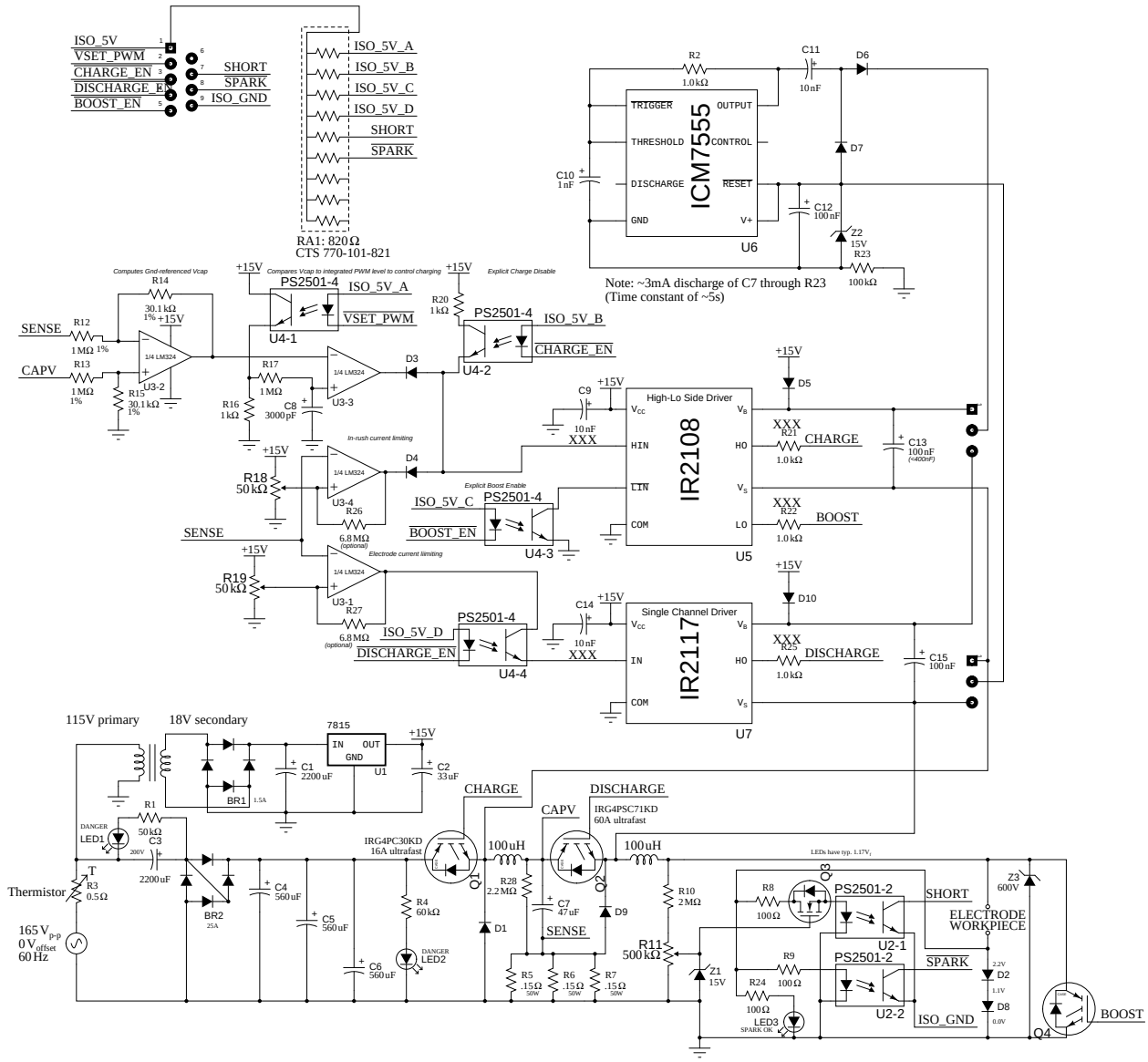

'GARDEN OF EDM' POWER SUPPLY
~50A, ~300VDC.
Designed by C. Scott Ananian (edm@cscott.net)